Effects of Shot Peening on High Cycle Fatigue Behavior of Powder Metallurgy and Conventional forms of a Medium Carbon Steel

M.M.Mirzazadeh

University of Waterloo, 200 University Ave., Waterloo, Canada N2L 3G1

Abstract
Non shot-peened and shot-peened quenched-tempered medium carbon (AISI 1151QT) steel and PM specimens were fatigue tested under fully reversed tension-compression loading conditions to investigate shot peening influence on the high cycle fatigue properties of these steels ($N=10^6$-10^7).The results showed that shot peening had beneficial effect on fatigue limit of PM whereas it had detrimental effect on AISI 1151QT. Microhardness profiles indicated that higher amplitude of cyclic softening occurred in shot peened AISI 1151QT than non shot-peened conditions but neither cyclic softening nor hardening was apparent in PM steels. The gradient of compressive residual stresses induced by shot peening was greater than loading stresses. The results show that AISI 1151QT fatigue limit decreased 11-12.0% after shot peening whereas increased 10-14% in PM indicating compressive residual stresses and work hardening played important role.

Keywords Shot-peening, fatigue, powder metallurgy (PM), quenched-tempered, carbon steels.

Introduction

Fatigue is a major consideration in the design and performance evaluation of materials, components, and structures since about 90 percent of all mechanical failures are attributed to fatigue fractures [1]. Automobile engine connecting rods are high volume production components subjected to many millions of repetitive cyclic loadings, from high compressive loads because of combustion to high tensile loads due to inertia. Therefore, connecting rods are typically designed for infinite life and the primary design criterion is fatigue limit [1,2].

Forged quenched-tempered medium carbon steels are traditionally used to manufacture automotive connecting rods but are being replaced by powder metallurgy or microalloy steels where possible. Powder metallurgy parts have the advantages of reducing waste material and machining operations as well as low unit cost when mass-produced, while their main disadvantages are high cost of process i.e. high cost of dies and materials [3].

Shot-peening is a well-known method introduced in surface engineering to extend fatigue life of components and structures under cyclic loading [4]. The main shot peening effects on the surfaces and sub-surface layers are compressive residual stresses, work hardening and increase of surface roughness [5]. The influence of these factors depends on the original structure, geometry of component, applied stress, strengthening method and strength or hardness of the material [6].

In this study, the effect of shot-peening on the high cycle fatigue behaviour of a powder metallurgy (PM) and quenched-tempered (QT) medium carbon steel (AISI 1151) will be investigated by relating their lives to shot-peening.

Materials and Experimental Procedure

Quenched-tempered AISI1151 and PM specimens, used for manufacture of connecting rods, have been tested in this study. Their chemical composition and mechanical properties are shown in Table 1 and 2 respectively.

Table 1. Chemical Composition

Material	C	Mn	S	P	Cu	Cr	V
AISI 1151	0.48-0.55	0.7-1.0	0.08-0.13	0.04	-	-	-
PM	0.5	0.31	0.12	-	3.06	-	-

Table 2. Mechanical Properties

Material	Yield Strength (MPa)	Tensile Strength (MPa)	Elongation (%)	Reduction of Area (%)
AISI 1151	930	1000	12%	31%
PM	565	890	15%	30%

Both the materials machined according to the dimensions given in Figure 1 below. Half of the specimens (10) from each group were shot-peened to Almen scale 14-18A using 1mm diameter steel shot. The rest (9) remained in their non shot-peened condition. All the specimens were fatigue tested under fully reversed (R=-1) tension-compression loading conditions.

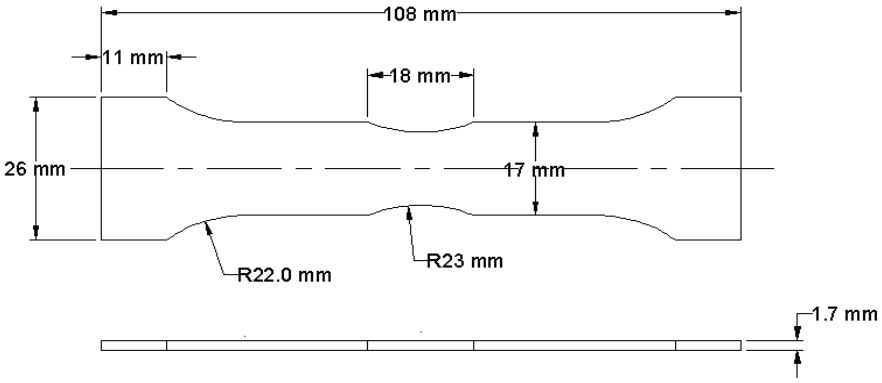

Figure 1- Fatigue test specimen

After fatigue testing, microhardness tests were carried out on representative non shot-peened and shot-peened specimens and X-ray diffraction method were used for measurement of residual stresses. Surface roughness was measured using a Talysurf.

Results

Table 3 and Figure 2 show fatigue strengths and S-N curves of AISI 1151QT and PM in both non shot-peened and shot-peened condition. Comparing the non shot-peened and shot-peened samples, a decrease of 11-12% in fatigue limit of AISI1151QT occurred after shot-peening whereas fatigue limit increased 10-14% in PM.

AISI 1151QT

Figure 3 shows the microhardness profiles of the non-cycled and cycled selected non shot-peened and shot-peened AISI 1151QT and PM specimens in the L-S direction. The average hardness for non shot-peened non-cycled and cycled QT specimens were 312±6 and 318±6 HV0.1-0.5 respectively. These similar hardness values with similar standard deviations indicate that no cyclic softening or hardening occurred for AISI1151QT steel in the non shot-peened condition after 6.5×10^5 cycles at σ_a=441MPa.

Table 3. AISI1151QT and PM fatigue strengths

Material	Cycle Number	Non Shot-Peened (MPa)	Shot-Peened (MPa)	Fatigue Strength Ave. Change (%)
AISI 1151QT	10^6	418.3±18.6	372.3±31.3	-11.0%
	10^7	427.3±7.6	375.9±32.7	-12.0%
PM	10^6	310.0±13.8	353.5±19.4	14.0%
	10^7	311.0±19.5	343.2±22.4	10.4%

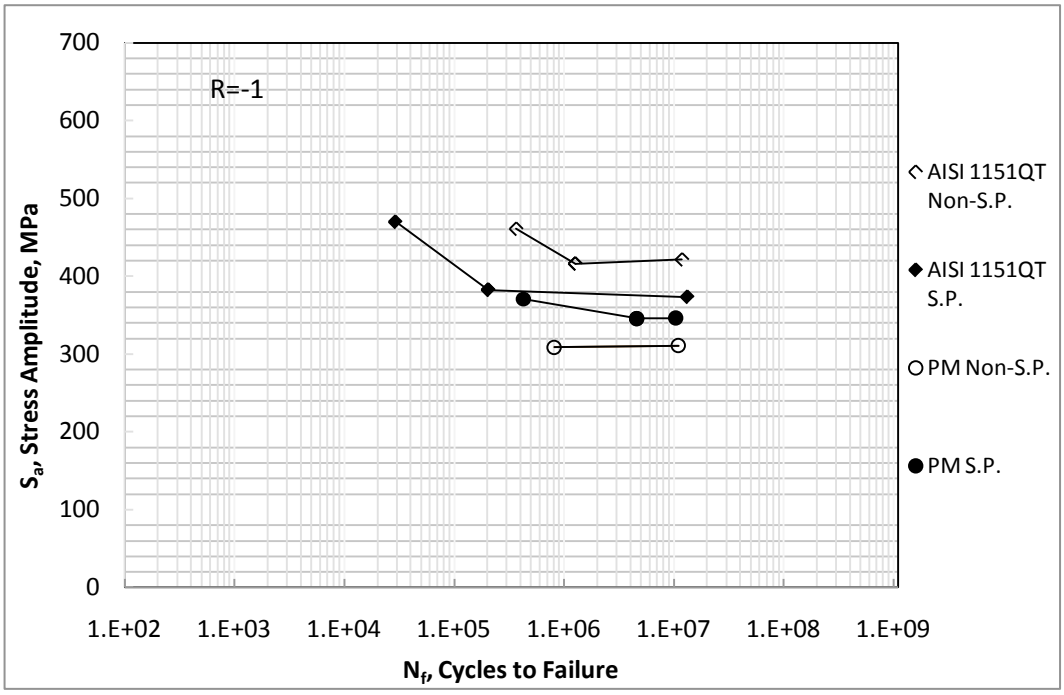

Figure 2. S-N curves for the non shot-peened and shot-peened specimens

The hardness values in the center for the shot-peened AISI1151QT specimens were 322±11 for non-cycled and 306±12 HV0.1-0.5 for cycled respectively. Also surface hardness in the affected regions (sides) of the non-cycled was higher than the cycled specimens indicating that cyclic softening occurred after 2.9×10^4 cycles at σ_a=461MPa in the shot-peened condition. A decrease in the depth of surface hardness from 0.6mm to 0.45mm on the left side occurred and the amount of softening in the affected (shot-peened) region was 34% on the left side and 14% on the right side.

PM

The hardness values for the non-cycled and cycled PM specimens in non shot-peened condition were 304±27 and 300±22 HV0.1-0.5 respectively. These similar hardness values with similar standard deviations indicate that neither cyclic softening nor hardening occurred in the non shot-peened condition after 8.1×10^5 cycles at σ_a=304MPa. The average hardness of the shot-peened PM non-cycled and cycled samples in the center were 333±36 and 342±28 HV0.1-0.5 respectively. Considering the standard deviations, no difference is seen in the center, indicating that significant cyclic softening or hardening have not occurred in this region after 1.8×10^6 cycles at σ_a=369MPa. In the affected regions (sides) cyclic softening or hardening was not apparent, however, on the right side there is an indication that some softening occurred between 1.15 to 1.5mm. A decrease in the depth of surface hardness from 1.1mm to 1.25mm on the right side is seen and the amount of softening in the shot-peened region on the right side was 31%.

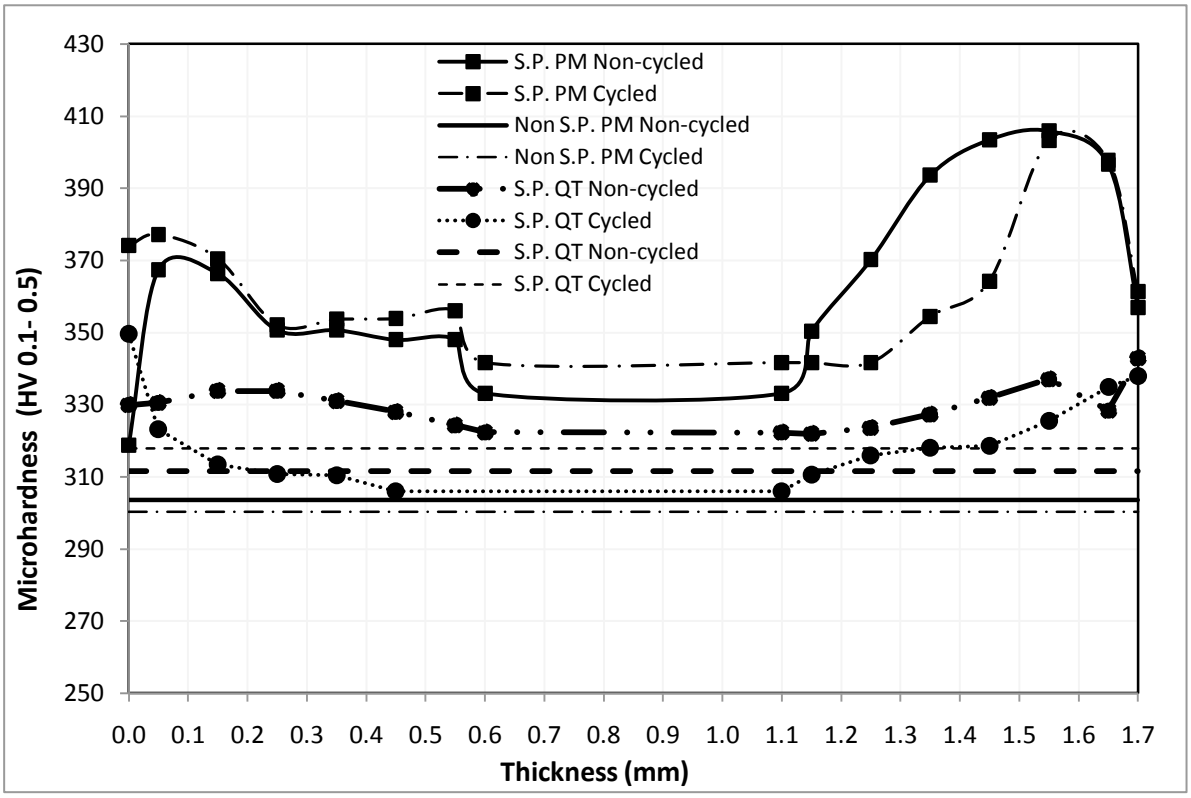

Figure 3.PM and AISI1151 non shot-peened and shot-peened L-S microhardness profiles

Compressive Residual Stresses

Figure 4 represents the similar residual stress profiles for all the shot-peened specimens. The maximum stress of -464MPa at a depth of 0.1mm decreased to -207MPa at the depth of 0.5mm [7].

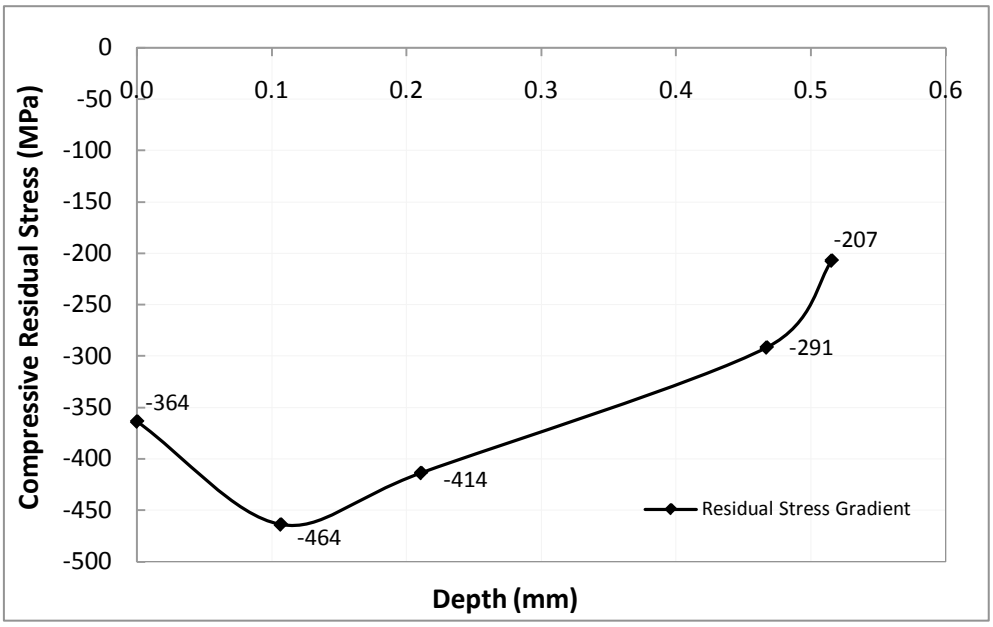

Figure 4. Compressive residual stress profile after shot-peening

Discussion and Conclusions

The microhardness profiles of non-cycled AISI 1151QT and PM specimens before and after shot-peening shows that significant work hardening occurred after shot-peening. The

microhardness profiles of non-cycled and cycled AISI 1151QT in non shot-peened condition indicates that no cyclic softening or hardening occurred, however, microhardness profiles of this steel in shot-peened condition show that cyclic softening occurred. Comparing the non-cycled and cycled PM steels, no significant cyclic softening or hardening occurred in non shot-peened and shot-peened conditions.

In this study, the surface roughness similarly increased from 0.26±0.03μm in the non shot-peened condition to 3.60±0.44μm in the shot-peened condition for the two steels [7]. Increase of surface roughness leads to the development of stress concentration sites resulting in sooner and higher crack initiation and propagation, however, this is countered by the compressive residual stresses and work hardening effect. In this study, a tension-compression loading condition produces different stress gradients than bending and rotating-bending. The hardened layers and the higher gradient of compressive residual stresses than loading stresses prevent initiation of cracks on the surface leading to initiation in the sub-surface layers where the loading stresses exceed the local fatigue strength, reducing the negative effect of surface roughness on the fatigue behaviour of the shot-peened specimens. Hence after shot peening, fatigue cracks initiate in subsurface layers where the applied tension stress exceeds the compressive residual stresses created by shot peening [8,9]. Metallographic examination has shown that fatigue cracking in shot-peened specimens shifted to the interior, so the detrimental effects of the roughened surfaces by shot peeing became less important [10]. A model by Guechichi and Castex [8] determined the position of the crack source for shot-peened quenched and tempered low alloy steel at a depth of 0.3mm below the surface, which was similar to the thickness of the shot-peened layer. Wang et.al [11] performed three-point bending fatigue tests on 20Cr, 30CrMo, 40Cr, GC4, 45 steels and Al-alloy LC9. They showed that fatigue cracks were always located at the surface for non shot-peened cases, whereas these cracks were located beneath the compressive residual stress zone in all the shot-peened specimens except quenched tempered medium carbon steel (AISI 1045) in which crack sources were located inside the hardened layer within compressive residual stress zone.

In the present work, the push-pull fatigue strength in the quenched-tempered medium carbon steel (AISI 1151) decreased 12.0% after shot-peening which could be due to the higher plastic strain amplitudes which are always measured for the shot-peened quenched-tempered medium carbon steels with similar stress amplitudes and comparable number of cycles than for non shot-peened ones under tension-compression loading [12]. Besides, the onset of cyclic softening is shifted to smaller numbers of cycles after shot-peening in quenched-tempered medium carbon steel [12]. In this study, the improvement (10-14%) in the fatigue strength of the PM was smaller than the 22% improvement in rotating-bending fatigue strengths that was observed after shot-peening of smooth air cooled medium carbon steels by [13]. The present changes result from the different test procedure whereby the tension-compression loading conditions restricted the depth of the beneficial compressive residual stresses.

Conclusions

1. Shot-peening improves the tension-compression fatigue limit of PM while deteriorates quenched-tempered medium carbon steel fatigue limit.

2. The beneficial effects of shot peening, compressive residual stresses and work hardening, are offset by surface roughness, caused by the shot peening process after very long tension-compression load cycles. This is higher in quenched-tempered medium carbon steels than PM.
3. The hardened layers decreased by about 50% in quenched-tempered and 31% in PM after cycling the steels at their fatigue limits.

Acknowledgements
Financial support was supplied by the Natural Sciences and Research Council of Canada. The authors are most grateful to Dr. Guangxu Cheng, Xi'an Jiatong University, Shaanxi, China for conducting the fatigue tests.

References

[1] A.Afzal and A. Fatemi, *A Comparative Study of Fatigue Behavior and Life Predictions of Forged Steel and PM Connecting Rods*, SAE International, 2004, SAE Paper No. 2004-01-1529.

[2] P.S. Shenoy and A. Fatemi, *Dynamic Analysis of Loads and Stresses in Connecting Rods*, Journal of Mechanical Engineering Science, Vol. 220 (2006), pp 615-624.

[3] A.Fatemi and M.Zoroufi, *fatigue performance evaluation of forged versus competing process technologies: a comparative study*, 24th forging industry technical conference, Cleveland, Ohio, 2002.

[4] M.Mirzazadeh and A.Plumtree, *The Effect of Shot-peening on the Fatigue Limits of Four Connecting Rod Steels*, MASc Thesis, Department of Mechanical & Mechatronics Engineering, University of Waterloo, Waterloo, August 2010.

[5] R.Fathallah, A.Laamouri, H.Sidhom, C.Braham, *High Cycle Fatigue Behavior Prediction of Shot Peened Parts*, International Journal of Fatigue, Vol.26 (2004) pp 1053–1067.

[6] G.H.Farrahi, J.L.Lebrun and D.Courtain, *Effect of Shot Peening on Residual Stress And Fatigue Life of a Spring Steel*, Fatigue & Fracture of Engineering Materials and Structures, Vol.18 (1995) pp 211-220.

[7] A.Plumtree, *Shot peening Effects on Fatigue Life", 12th International Conference on Fracture*, Ottawa, Canada, 2009.

[8] H.Guechichi, L.Castex, *Fatigue Limits Prediction of Surface Treated Materials*, Journal of Materials Processing Technology, Vol.172 (2006) pp.381–387.

[9] M.A.S Torres, H.J.C Voorwald, *An Evaluation of Shot Peening, Residual Stress and Stress Relaxation on the Fatigue Life of AISI 4340 Steel*, International Journal of Fatigue, Vol.24(2002), pp 877-886.

[10] Y.Gao, X.Li, Q.Yang and M.Yao, *Influence of Surface Integrity on Fatigue Strength of 40CrNi2Si2MoVA steel*, Material Letters, Vol.61 (2007), pp 466-469.

[11] S.Wang, Y.Li, M.Yao, R.Wang, *Fatigue Limit of Shot Peened Metal*, Journal of Material Processing Technology, Vol.73 (1998), pp 57-63.

[12] D.Eifler, D.Löhe, B.Scholtes, *Residual Stresses and Fatigue of Metallic Materials*, Residual Stresses - Measurement, Calculation and Evaluation, DGM Informationsgesellschaft Verlag, Oberursel (1991), pp 157-166.

[13] A.M.Eleiche, M.M.Megahed, N.M.Abd-Allah, *The Shot Peening Effect on the HCF Behaviour of High Strength Martensitic Steels*, Journal of Material Processing Technology, Vol.113 (2001), pp 502-508.